The Application of the Indentation Test on the Measurement of Modulus of Soft Contact Lens Materials

Alexander Leube, B.Sc. [1]; Sebastian Marx, Dipl.-Ing. (FH) [2]; Wolfgang Sickenberger, Prof., M.Sc. Optom (USA), Dipl.-Ing. [1,2]
1 Ernst Abbe University of Applied Sciences, Jena, Germany; 2 JenVis Research, Jena, Germany

Introduction:

Material parameters have a direct impact on the comfort [(1)] of soft contact lenses. The measurement of material properties such as the modulus is being under discussion and is not yet a standardized procedure.

Purpose:

The aim of this study is to develop and test a novel, non-destructive method for determining the modulus of elasticity on market-leading soft contact lenses. In this context, confounding factors should be analyzed and examined. The measured values should be compared to the values that are given by the manufacturer.

Methods:

Instrumented hardness testing according to *DIN EN ISO 14577-1*:

- This procedure uses a diamond vickers pyramid to apply a defined force (F [mN]) to the contact lens material with the simultaneous measuring of the indentation depth (h [µm]); device: *Fischerscope*® HM 2000, Helmut Fischer GmbH, Germany
- The measurement of all soft contact lens materials can be carried out under full hydrated conditions without any drying out
- a full calotte and a pin hole calotte out of aluminum (fig. 1) was used

(1) Loading: The force rises until the maximum force is reached. The increase of the indentation depth is not linear (fig. 2)

(2) Unloading: When the force is removed, the test peak is pushed back by the elasticity of the material → calculation of the modulus (EIT) [(2)]

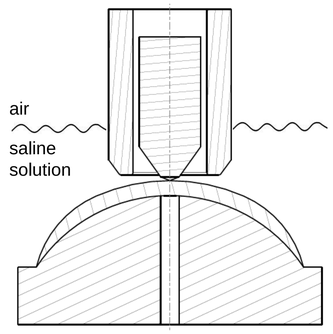

Fig. 1: Measurement setup

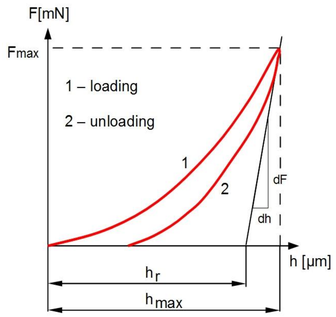

Fig. 2: Force displacement graph of a soft contact lens

- To evaluate the influence of the fluid used, the lenses were soaked for 24 hours
- The influence of the thickness of the lenses (-3.0D; +3.0D; +6.0D) and of stacking (different numbers of lenses above each other) was examined

Results:

Influence factors of measurement setup:

- For the evaluation of the different fluids (measured on *Narafilcon A*, +3.0D), a significantly lower modulus for saline solution was found in comparison to conditioned solution (*OptiFree, Alcon*) ($p<0.001$; t-Test) and to blister solution ($p=0.03$; t-Test), any other differences are not significant (fig. 3)
- The variation of the thickness of the lens material, realized by different powers of the contact lens, shows that the stage surface of full calotte leads to higher modulus values in comparison to a stage surface of calotte with pin hole ($r_{min}=0.78$ $p=0.24$; $r_{max}=0.99$ $p=0.03$) (fig. 4)

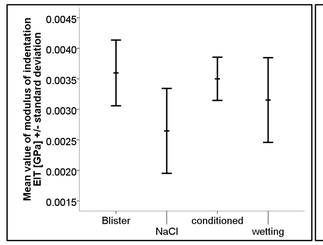

Fig. 3: comparison of the measured modulus for different soaking fluids

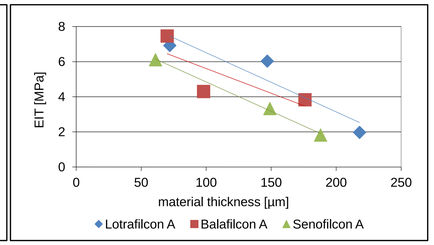

Fig. 4: correlation between the measured modulus [MPa] and the material thickness [µm]

- To get a higher material thickness the use of stacking (different numbers of lenses above each other) is possible
- The measured values of modulus (*Lotrafilcon B*) are lower ($r=0.938$ $p=0.755$, t-test) and the standard deviation rises ($r=0.878$ $p=0.789$, t-test) if serveral stacked lenses are tested (fig. 5)

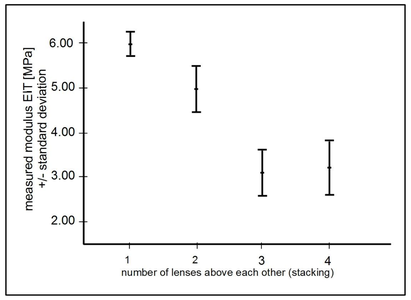

Fig. 5: measured modulus for different number of lenses above each other (stacking)

- Futhermore, the influence of the use applied maximum force and of different calotte materials were examined

Comparative measurements of market-leading soft contact lens materials:

- Different variations for the calotte with and without the central hole. The coefficient of variation ranges from 2% to 35%
- The contact lenses measured show **material and process-specific modulus values.** These values are statistically, significant different in comparison to values provided by the manufacturer [(3)] ($p<0.001$; t-Test)

Tab. 1 overview of the modulus EIT [MPa] values of measured materials

EIT [MPa]	Lotra-filcon A	Bala-filcon A	Seno-filcon A	Lotra-filcon B	Com-filcon A	Nel-filcon A	Nara-filcon A	Eta-filcon A
hole calotte	1.86	0.65	1.08	0.62	0.71	0.46	0.55	1.31
full calotte	1.64	3.38	2.91	1.32	1.07	1.35	1.79	1.44

Discussion:

The evaluation of several confounding factors shows that the measured modulus is on the lowest level when using saline solution and a material which as thick as possible. The influence of the thickness is caused on the material of the calotte. In this context, a pin hole calotte was used. The higher standard deviation when using more contact lenses (stacking) is caused by the inaccurate superimposition of the contact lenses. In this case, the use of a single lens with an aluminum full calotte and saline solution as fluid is indicated. For the maximum material thickness a high-power contact lens(e.g. +6.0D) is recommended.

Conclusion:

The novel indentation test was applicable for all market-leading soft contact lens materials. The measurement of the modulus of elasticity was performed under full hydrated conditions for the first time. Several confounding factors were described. The comparison of the modulus of soft contact lenses was difficult. The reasons are the various, non standardized measurement procedures. This novel method gives the contact lens specialists comparable values for the modulus of all market-leading soft contact lens materials.

References:

(1) JONES, L. & FRENCH, K. A deacade with silicone hydrogels: Part 1. *Silicone Hydrogels* [8]. 2008, Page 42–46.
(2) OLIVER, W. & PHARR, G. Measurement of hardness and elastic modulus by instrumented indentation: Advances in understanding and refinements to methodology. *Journal of Materials Research,* 19 [01]. 2004, Page 3–20.
(3) ROSS, G. et al. *Silicone Hydrogel: Trends in Products and Properties.* Birmingham. 2005. BIOMATERIALS UNIT, ASTON UNIVERSITY. Poster from BCLA 29th Clinical Conference & Exhibition, Brighton 2005.

Acknowledgements:

This study was accomplished without any financial support.

contact: Corresponding Author: Alexander Leube E-Mail: a.leube@gmx.de; 1 Ernst-Abbe-University of Applied Science Jena, Carl-Zeiss-Promenade 2, 07745 Jena, Germany; 2 JenVis Research, Carl-Zeiss-Promenade 2, 07745 Jena, Germany